SCHEMATIC DIAGRAM • FM-AM TUNING SECTIONS

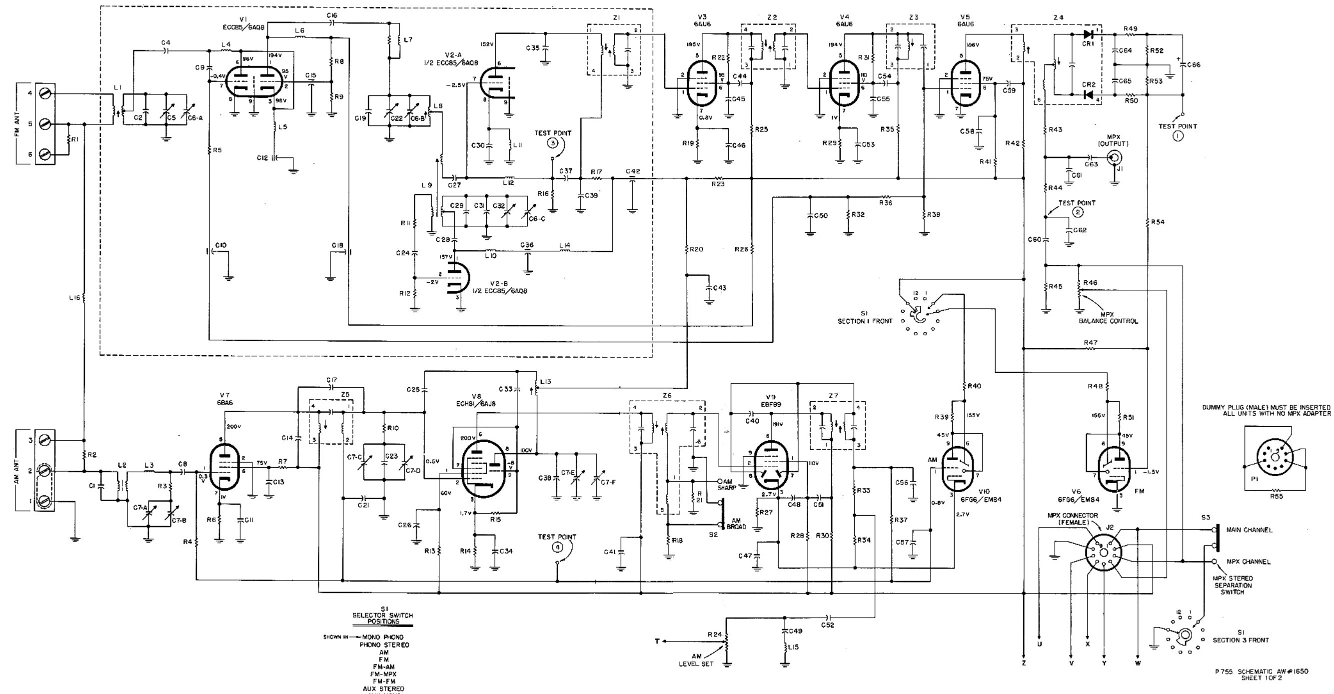

RESISTORS	R1	R2		R3	R4	R5 R6			R7		R8 R9		R10	R11 R12		R13	R14	R15		R16		R17		R18	R19 R20 R21	R22 R23 R24	R25 R26 R27		R28	R29 R30	R31 TO R34	R35 R36 R37		R38	R39	R40	R41		R42		R43 R44 R45		R46 R47 R48	R49 R50 R51	R52 R53 R54		R55
CAPACITORS		C1	C2 C7-A	C4 C5	C6-A C7-B C8	C9 C10	C11	C12 C13	C14	C15	C16 C17 C18	C19 C7-C C21	C22 C23	C24 C6-B C7-D	C25 C26	C27 C28 C29	C30 C31	C32 C33 C34	C35 C36 C6-C	C37 C38	C39 C7-E	C7-F	C41 C42		C43	C44 C45 C46	C47 C40,	C48 C49		C50 C51 C52	C53	C54 C55	C56 C57			C58		C59		C60		C61 C62	C63	C64 C65		C66	